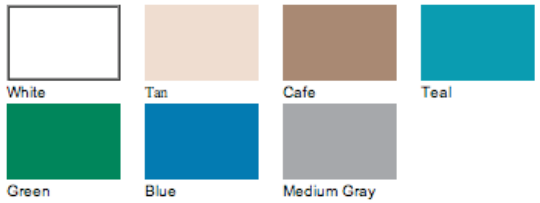
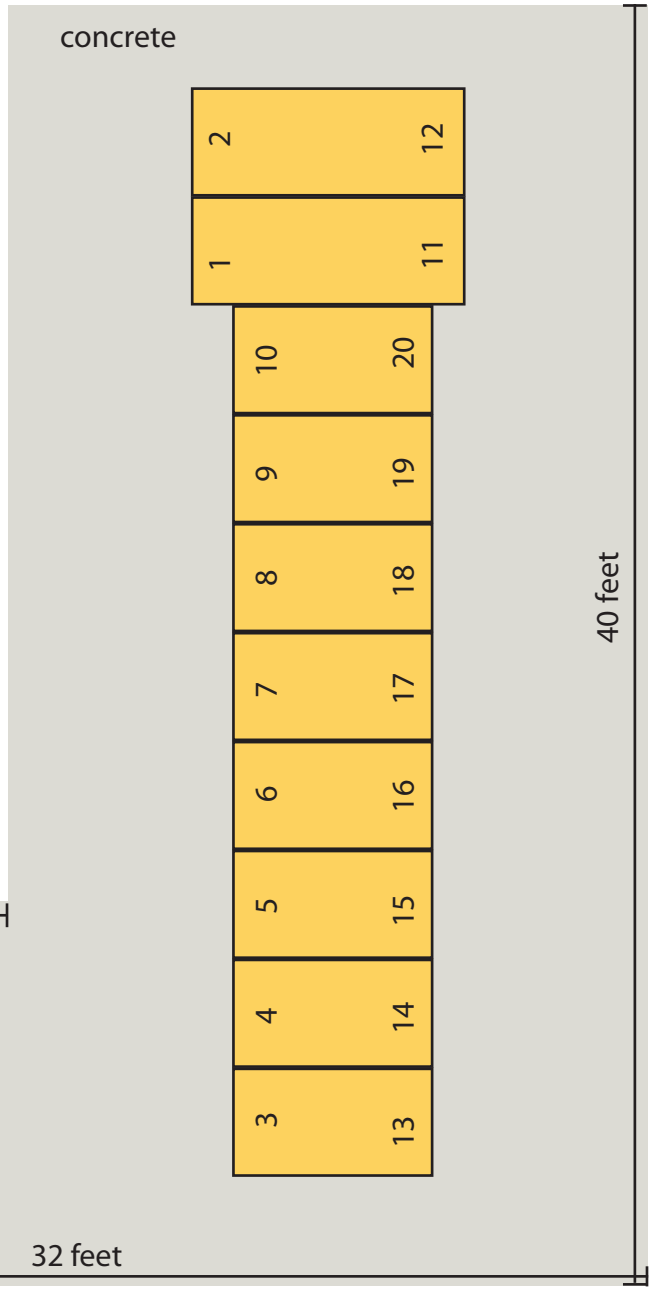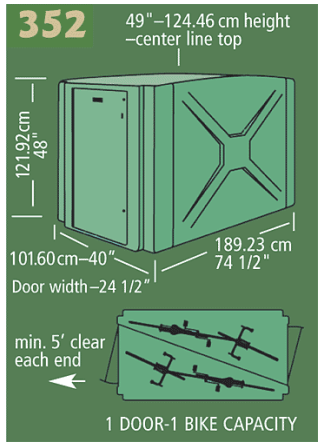
1. 20 lockers
2. 10 spaces under shed
3. Green to match transformer or grey to match shed?
4. First come, first serve basis
5. Solar Lights?